Identifying Privacy Personas

Olena Hrynenko

Motivation

Personalised advisor

Sample comparison

Modelling app-persona interaction

O. Hrynenko, A. Cavallaro “Identifying Privacy Personas”, accepted at Proceedings on Privacy Enhancing Technologies, 2025.

Method

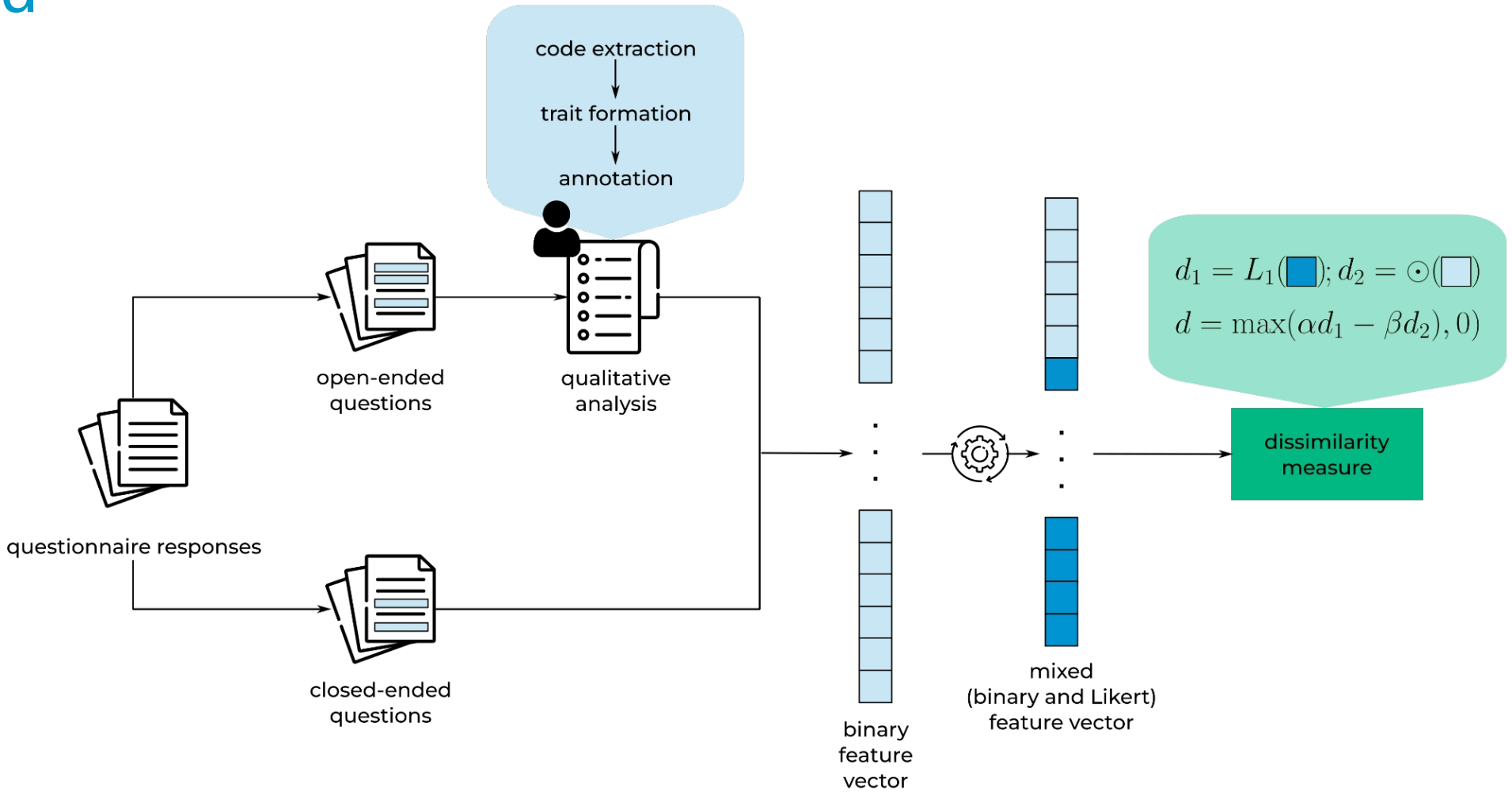

O. Hrynenko, A. Cavallaro “Identifying Privacy Personas”, accepted at Proceedings on Privacy Enhancing Technologies, 2025.

Dendrogram construction

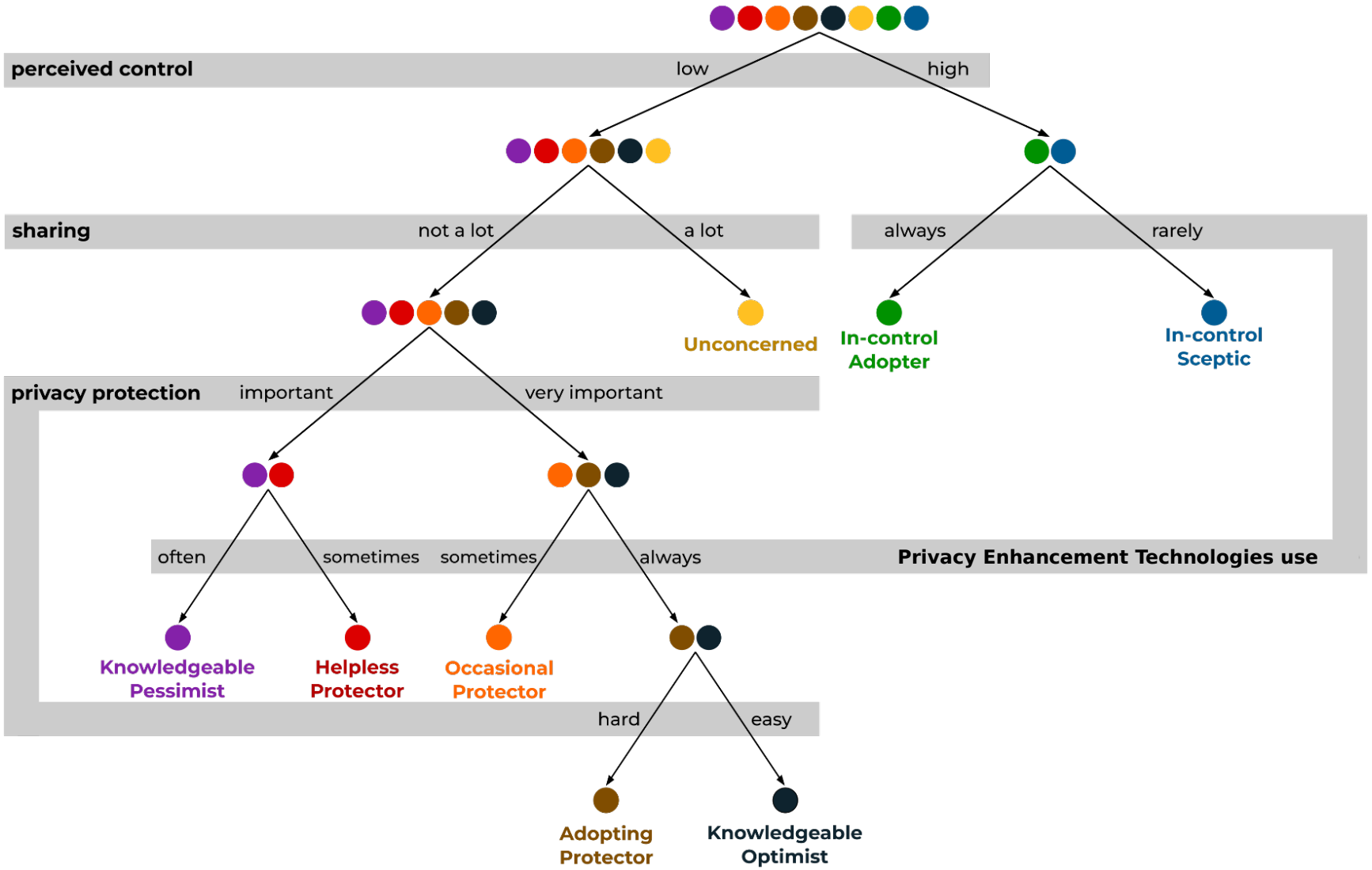

O. Hrynenko, A. Cavallaro “Identifying Privacy Personas”, accepted at Proceedings on Privacy Enhancing Technologies, 2025.

Thank you!